3. Front Axle

A: REMOVAL

1) Disconnect the ground cable from the battery.
2) Lift up the vehicle, and remove the front wheels.
3) Lift the crimped section of axle nut.

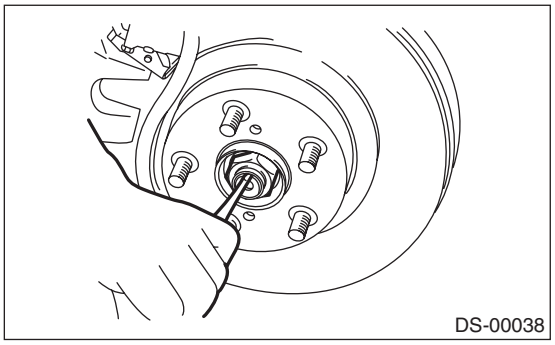

4) Remove the axle nut using a socket wrench while depressing the brake pedal.

CAUTION:
Remove the axle nut while there is no load being applied to the axle. Failure to do so may damage the wheel bearings.

5) Remove the stabilizer link.

- Sedan model

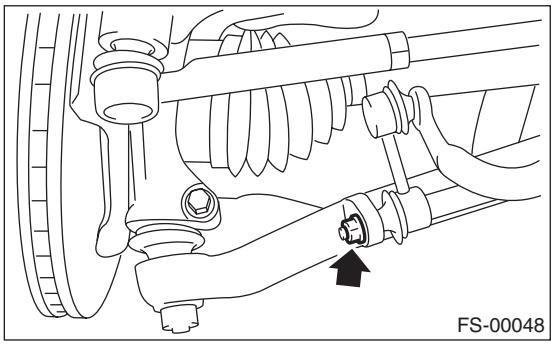

- Wagon model

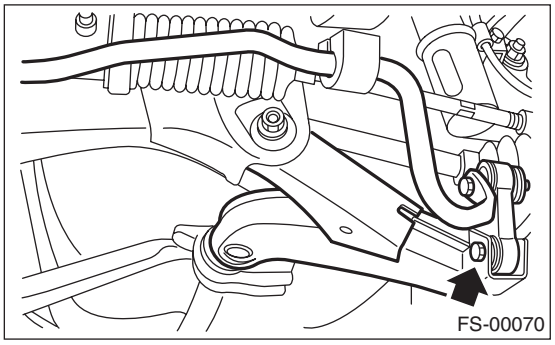

6) Remove the disc brake caliper from the housing, and suspend it from strut using a wire.

7) Remove the disc rotor from the hub.

NOTE:
If it is difficult to remove the disc rotor from the hub, drive the 8 mm bolt into the threaded end of rotor, and then remove the rotor.

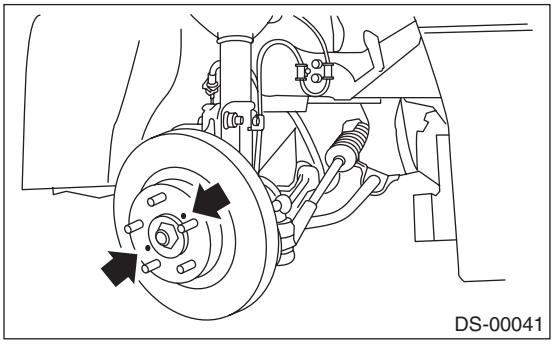

8) Remove the cotter pin and castle nut securing the tie-rod end to the housing knuckle arm.

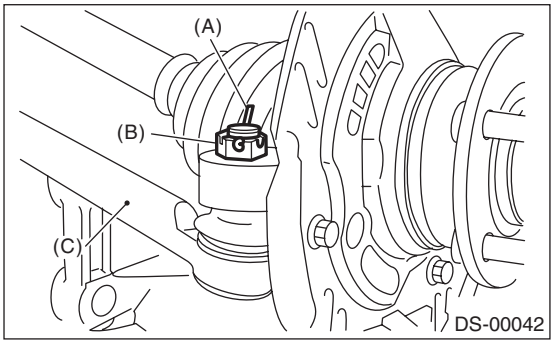

(A) Cotter pin
(B) Castle nut
(C) Tie-rod

9) Using a puller, remove the tie-rod ball joint from knuckle arm.

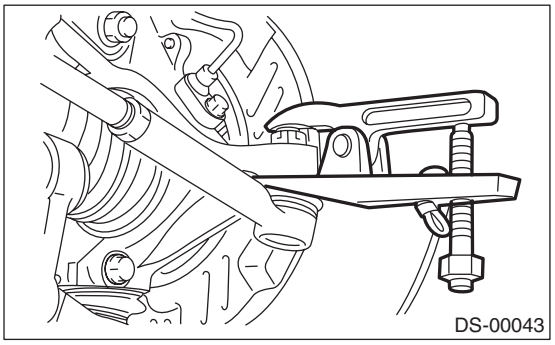

10) Remove the ABS wheel speed sensor assembly and harness.

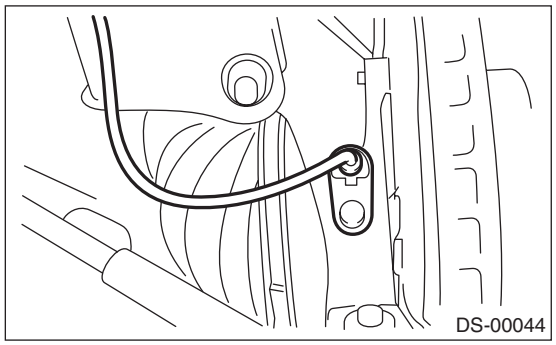

11) Remove the transverse link ball joint from the housing.

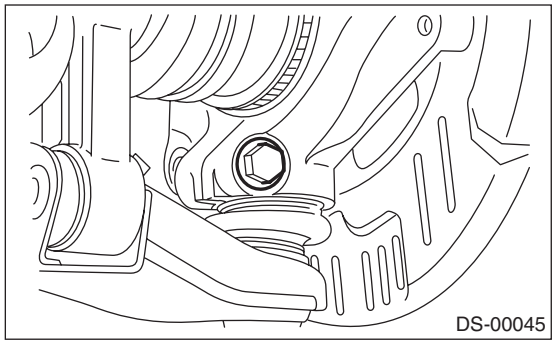

12) Remove the front drive shaft assembly from the hub. If it is hard to remove, use the ST.

ST1 926470000 AXLE SHAFT PULLER
ST2 28099PA110 AXLE SHAFT PULLER PLATE

CAUTION:
- **Whenever the front drive shaft has been pulled out, always replace the differential side retainer oil seal on the transmission side with a new seal.**
- **Hang the front drive shaft on the vehicle body using a wire.**

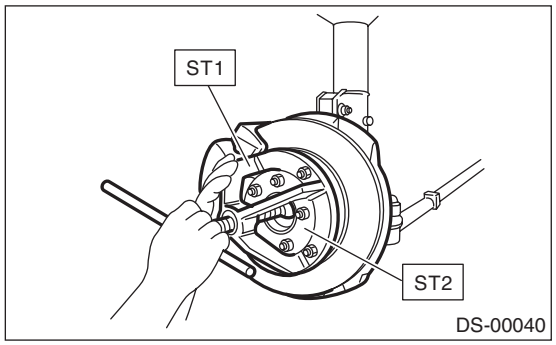

13) After scribing an alignment mark on camber adjusting bolt head, remove the bolts which connect the housing and strut, and disconnect the housing from strut.

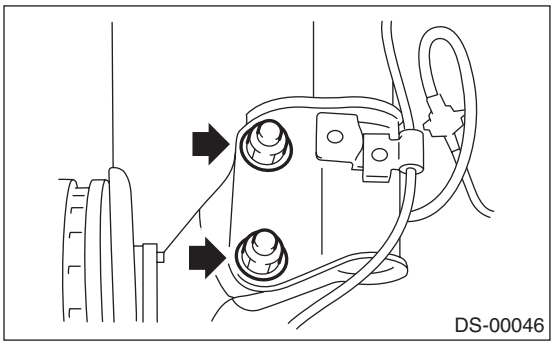

B: INSTALLATION

1) Temporarily tighten the front axle to the front strut.
2) Insert the front drive shaft into the front axle.
3) Tighten the axle nut temporarily.
4) Install the transverse link ball joint to the housing.

Tightening torque:
50 N·m (5.1 kgf-m, 37 ft-lb)

5) Align the alignment mark on the camber adjusting bolt head, and tighten the housing and strut using a new self-locking nut.

Tightening torque:
175 N·m (17.8 kgf-m, 129 ft-lb)

6) Connect the tie-rod end ball joint to the knuckle arm with a castle nut.

Tightening torque:
27.0 N·m (2.75 kgf-m, 19.9 ft-lb)

CAUTION:
When connecting the tie-rod, do not hit the cap at bottom of tie-rod end with a hammer.

7) Tighten the castle nut to specified torque and tighten further within 60° until the pin hole is aligned with the slot in the nut. Bend the cotter pin to lock.

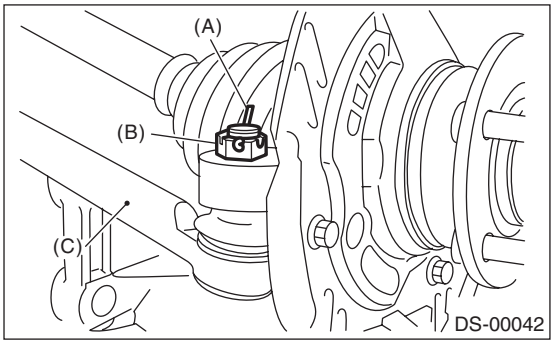

(A) Cotter pin
(B) Castle nut
(C) Tie-rod

8) Install the disc rotor to hub.
9) Install the disc brake caliper on the housing.

Tightening torque:
Except for STI model
80 N·m (8.2 kgf-m, 59 ft-lb)
STI model
155 N·m (15.8 kgf-m, 114.3 ft-lb)

10) Connect the stabilizer link.

Tightening torque:
Except for STI model
30 N·m (3.1 kgf-m, 22 ft-lb)
STI model
45 N·m (4.6 kgf-m, 33 ft-lb)

CAUTION:
Be sure to use a new self-locking nut.

11) Using ST1 and ST2, pull the front drive shaft into the required position.
ST1 922431000 AXLE SHAFT INSTALLER
ST2 927390000 ADAPTER

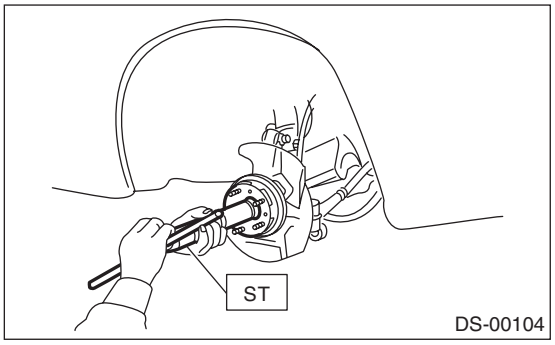

12) While depressing the brake pedal, tighten a new axle nut to the specified torque and lock it securely.

Tightening torque:
220 N·m (22.4 kgf-m, 162 ft-lb)

CAUTION:
Do not overtighten it as this may damage the wheel bearing.

13) After tightening the axle nut, lock it securely.

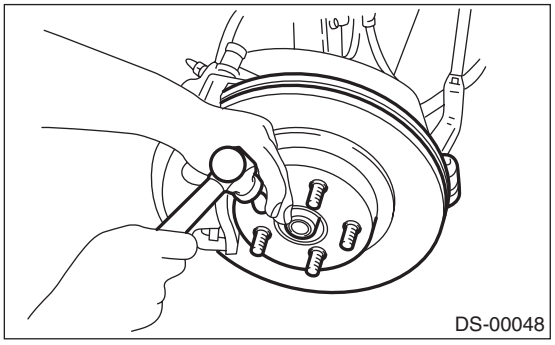

14) Install the ABS wheel speed sensor on the housing.

Tightening torque:
33 N·m (3.4 kgf-m, 24 ft-lb)

15) Install the wheel and tighten the wheel nuts to specified torque.

Tightening torque:
100 N·m (10.2 kgf-m, 73.8 ft-lb)

C: DISASSEMBLY

1. EXCEPT FOR STI MODEL

1) Using ST1, securely support the housing and hub.
2) Attach ST2 to housing and drive hub out.
ST1 927060000 HUB REMOVER
ST2 927080000 HUB STAND

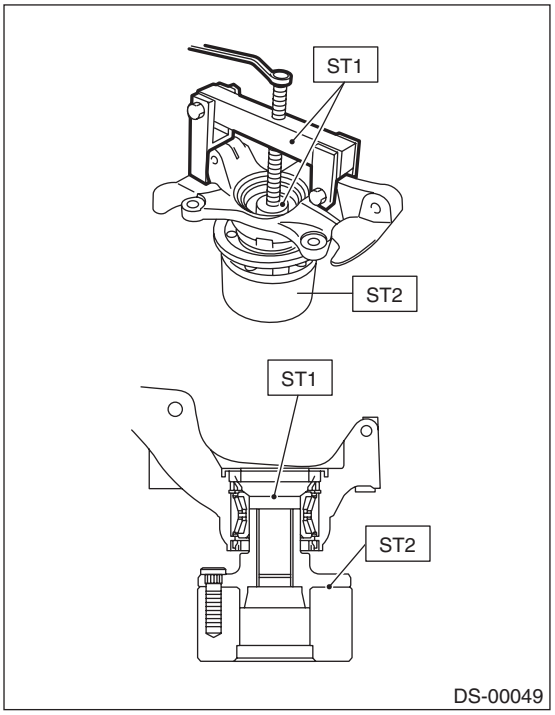

NOTE:
- If inner bearing race remains in the hub, remove it with a suitable tool (commercially available tools).
- Be careful not to scratch the polished area of the hub.

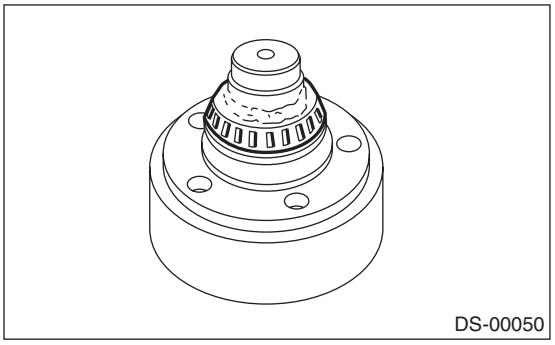

CAUTION:
If the hub is removed, the bearing cannot be reused.

3) Remove disc cover from housing.

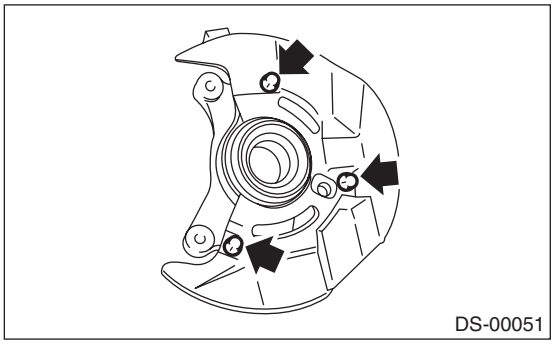

4) Remove the outer and inner oil seals using a flat tip screwdriver.
5) Remove the snap ring using a flat tip screwdriver.

NOTE:
Be careful not to damage housing during removal.

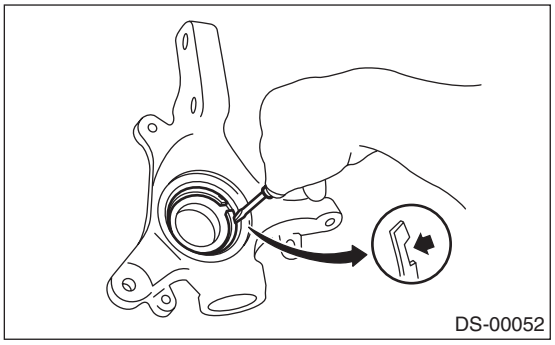

6) Using ST1, securely support the housing.
7) Using ST2, press the inner race, and push out the outer race of the bearing.
ST1 927400000 HOUSING STAND
ST2 927100000 BEARING PULLER

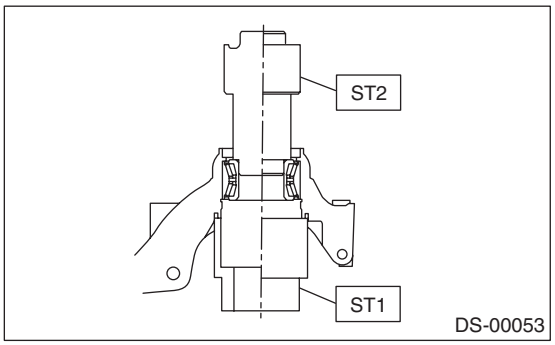

8) Using the ST and a hydraulic press, push out the hub bolts.
ST 927080000 HUB STAND

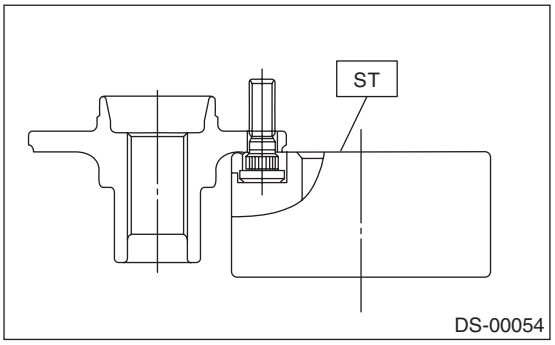

2. STI MODEL

1) Remove the four bolts from the housing, and remove the front hub unit bearing.

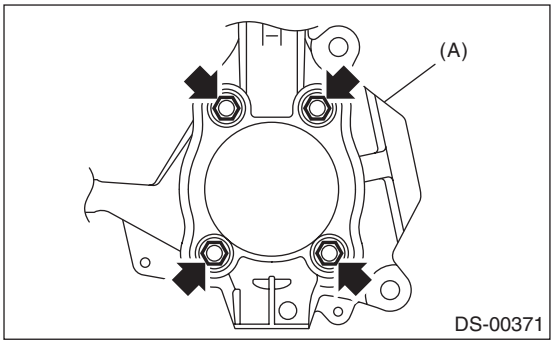

(A) Housing

2) Disassemble the front hub unit bearing. <Ref. to DS-20, DISASSEMBLY, Front Axle.>

D: ASSEMBLY

1. EXCEPT FOR STI MODEL

NOTE:
When the hub is removed from housing, replace the bearing set and oil seal with new parts.
1) Attach the hub to the ST securely.
ST 927080000 HUB STAND

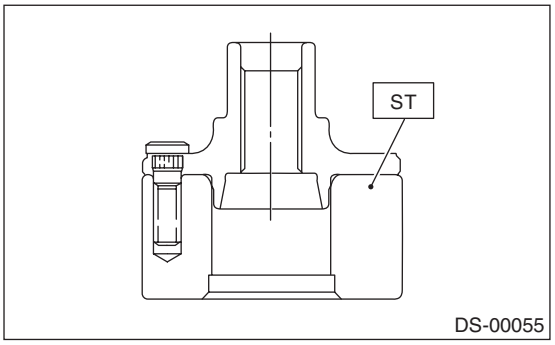

2) Using a press, press the new hub bolts until their seating surfaces contact the hub.

NOTE:
Use the 12 mm (0.47 in) dia. holes in the HUB STAND to prevent bolts from tilting.

3) Clean the dust or foreign particles from inside the housing.

4) Using ST1 and ST2, press a new bearing into place.

ST1 927400000 HOUSING STAND
ST2 927100000 BEARING PULLER

NOTE:
Be careful not to remove the plastic lock from the inner race when installing the bearings.

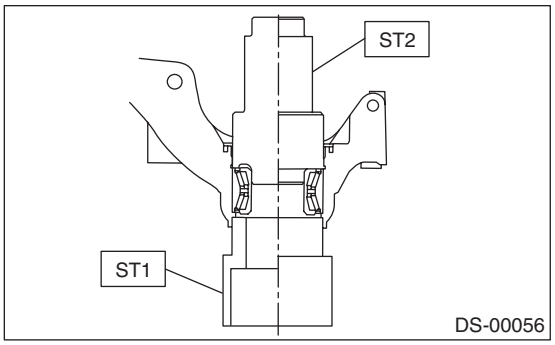

5) Using snap ring pliers, securely install the snap ring.

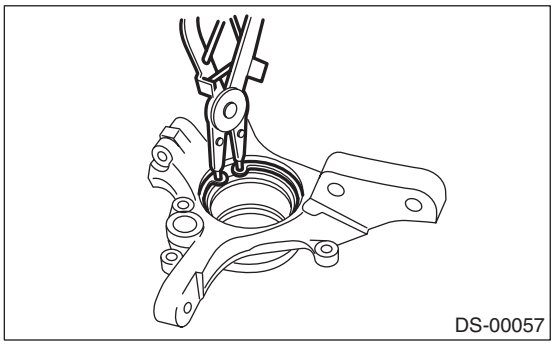

6) Using the ST1 and ST2, press the outer oil seal until it contacts the bottom of housing.

ST1 927410000 OIL SEAL INSTALLER
ST2 927400000 HOUSING STAND

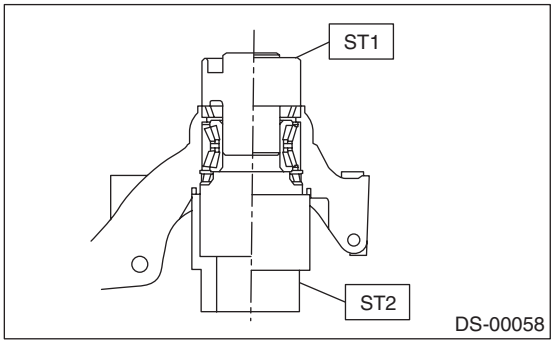

7) Using the ST1 and ST2, press the inner oil seal until it contacts the snap ring.

ST1 927410000 OIL SEAL INSTALLER
ST2 927400000 HOUSING STAND

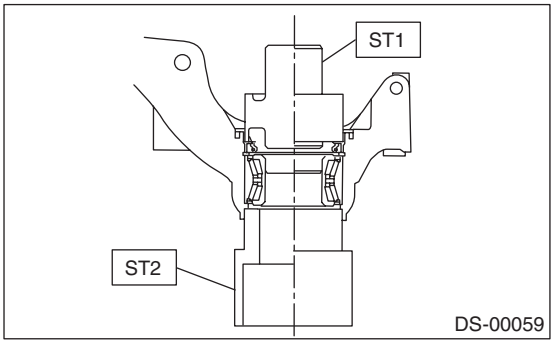

8) Invert the ST and housing (upside down).

ST 927400000 HOUSING STAND

9) Apply sufficient grease to the oil seal lip.

Specified grease:
SHELL 6459N

NOTE:
- If specified grease is not available, remove the bearing grease and apply Auto Rex A instead.
- Do not mix different types of grease.

10) Install the disc cover to housing with three bolts.

Tightening torque:
18 N·m (1.8 kgf-m, 13.0 ft-lb)

11) Attach the hub to ST1 securely.

12) Clean dust and foreign particles from the polished surface of hub.

13) Using ST2, press the inner race, and push the bearing into the hub.

ST1 927080000 HUB STAND
ST2 927120000 HUB INSTALLER

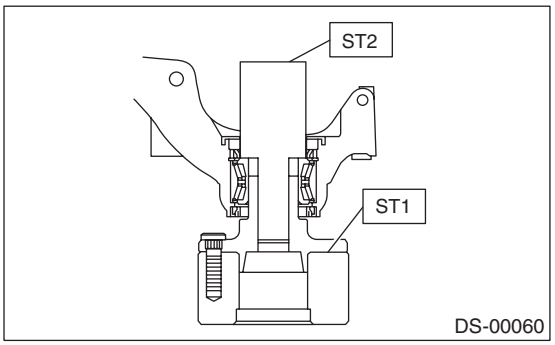

2. STI MODEL

1) Assemble the front hub unit bearing. <Ref. to DS-21, ASSEMBLY, Front Axle.>
2) Tighten the front hub unit bearing to housing with four bolts.

Tightening torque:
65 N·m (6.6 kgf-m, 47.9 ft-lb)

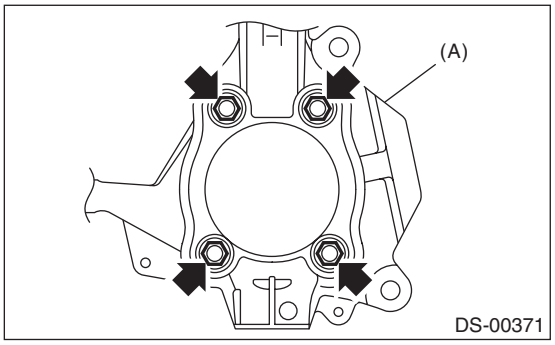

(A) Housing

E: INSPECTION

1) Moving the front tire up and down by hand, check there is no free play in bearing, and check the wheel rotates smoothly.

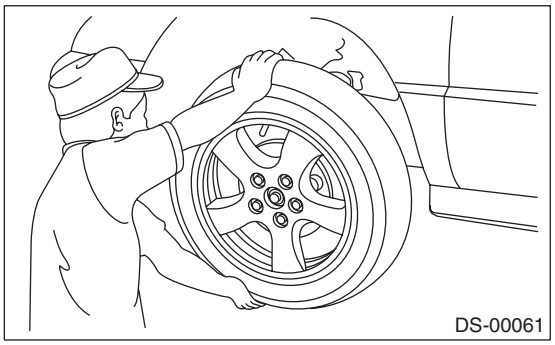

2) Inspect the lean of axis direction using a dial gauge. Replace the hub bearing if the play exceeds the limit value.
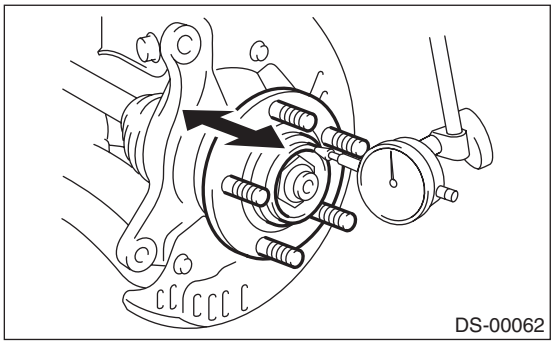
Service limit:
Maximum: 0.05 mm (0.0020 in)